A Modified Supertwisting Sliding Mode MPPT for PV system

Kantas WALID[(1)*], Mendaci SOFIANE[(2)], Gasmi HAMZA[(3)],Terfia ES-SAADI[(1)]
[(1)] Laboratory of Electrical Engineering of Guelma (LGEG), Department of Electrotechnical and Automatic Engineering, Université 8 mai 1945Guelma, Guelma, Algeria
[(2)] Laboratoire d'Automatique et Informatique de Guelma (LAIG), Department of Electrotechnical and Automatic Engineering, Université 8 mai 1945Guelma, Guelma, Algeria
[(3)] Advanced Control Laboratory (LABCAV), Department of Electronics and Telecommunications, Université 8 mai 1945Guelma, guelma, Algeria
[*]kantas.walid@univ-guelma.dz

Abstract: This paper focuses on the control of photovoltaic systems using sliding mode control (SMC). Considering the oscillation problems that appear in the classical sliding mode control, which can affect the output power generated by the photovoltaic panel, many studies have proposed a super twisting sliding mode control (STSMC) to minimize the chattering phenomena associated with classical SMC. However, to further reduce oscillations, this work proposes a modified super twisting SMCthat incorporates a fractional integrator to increase its flexibility and performance. To demonstrate the enhancements achieved with the proposed controller, a comparative simulation is implemented using Matlab/Simulink software. The results obtained highlight a significant reduction in oscillations, and clearly indicate the superiority of the modified STSMC controller over its classical counterpart.

Keywords: Photovoltaic systems, Maximum power point tracking, Sliding mode control, Modified super twisting SMC, Chattering phenomena, DC-DC boost converter

1. INTRODUCTION

Nowadays, the world's demand for energy is substantial and continuously increasing. While traditional sources offer significant energy production, they come with notable drawbacks, including environmental pollution and the accelerated depletion of these traditional energy sources [1]. Consequently, most countries are showing interest in renewable energy sources such as wind, biomass, hydropower, photovoltaic, green hydrogen, and geothermal, along with their respective technologies, to meet their power requirements with less pollution [2], [3].Among the most important of these sources is solar energy, which includes photovoltaic panels and solar mirror reflectors. The photovoltaic system, in particular, is widely used due to its ease of implementation, low construction costs, and minimal maintenance requirements compared to other systems [4]. To extract the maximum power from a PV panel, numerous strategies have been developed in the literature to track the maximum power point. These include traditional techniques such as perturb and observe (P&O), incremental conductance (INC), and proportional-integral (PI) control [5], [6], as well as techniques based on artificial intelligence, such as fuzzy logic control (FLC), artificial neural networks (ANN) [7], [8], particle swarm optimization (PSO), and grey wolf optimizer (GWO) [9], [10]. Additionally, advanced control methods like sliding mode control [13], super-twisting sliding mode control [17], and backstepping control [20] have also been investigated. In the paper [21] Fractional-order proportional-integral super twisting SMC is developed to enhance the wind energy system equipped with DFIG.The third order SMC is applied to PV system to improve the power quality and reduce the steady oscillations in [22].

In [11] a new sliding mode controller was designed to extract the MPP generated by the PV panel under variable weather conditions. The author used a boost converter and implemented the method in real-time to demonstrate its performance and validity. In [12] sliding mode control was applied to achieve the MPP for a standalone PV system, and to supply the load with high efficiency and accuracy. The method controlled both the boost converter and the inverter. The simulation results were compared with the traditional incremental conductance method, demonstrating that the sliding mode control method is more efficient than the INC. In [13], an adaptive backstepping sliding mode controller is proposed with the objective to regulate both the DC link voltage and the current injected

on the AC side in the photovoltaic grid-connected system with battery energy storage system (BESS). The simulation results obtained are compared with Proportional Integral (PI) and CBC methods. The novel technique displayed superior performance compared to the other two approaches. In [14], a hybrid backstepping super twisting sliding mode control is designed to enhance the operation of the MPPT based on a super twisting-SMC. The method also incorporates a differential flatness approach (DFA) to estimate the system state variables. This strategy is applied in a standalone PV system using a cascaded non-inverting buck-boost converter, which supplies a DC charge. The developed technique is more efficient, robust, has less chattering, and has a higher performance than other techniques such as backstepping, SMC, and PID. In paper [15], a super twisting SMC method is proposed to control the inverter of a three-phase grid-connected PV system. This approach aims to optimize the current and voltage injected into the grid, thereby improving power quality and minimizing the total harmonic distortion (THD) effect under normal conditions or in the presence of perturbations. In [16], the author applies the super twisting SMC to extract the maximum power point in a PV system under variable weather conditions. Cuckoo search (CS) optimization is also employed to enhance the operation of the super twisting SMC and accurately achieve the MPP with fewer oscillations and a faster response time.

In this paper, a modified super twisting SMC is applied to track the MPP under varying weather conditions using a boost converter. The novel aspect of this controller is the incorporation of a fractional integrator into the super twisting SMC. This increases the number of variables to be tuned, providing greater flexibility and enhancing the capability of the proposed controller.

2. PHOTOVOLTAIC PANEL MODEL

Green energy production has recently become a significant global challenge, with photovoltaic systems emerging as one of the most important and attractive sources. A photovoltaic panel produces energy by directly converting sunlight into direct current (DC). Various panel types exist in the market, such as monocrystalline, polycrystalline, and thin-film, among others. These types vary in terms of material, cost, efficiency, and lifespan, etc. The equivalent circuit of a photovoltaic cell is presented in Fig. 1.

The photovoltaic cell current equation is provided as follows:

$$I_{ph} = I_d + I_p + I_{pv} \quad (1)$$

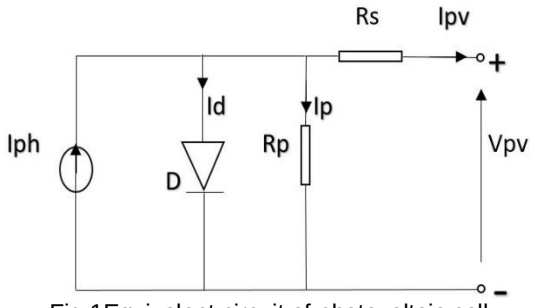

Fig.1Equivalent circuit of photovoltaic cell.

The diode current I_d is given by:

$$I_d = I_0\left[\exp\left(\frac{V_{pv} + R_s I_{pv}}{V_{th}\, a}\right) - 1\right] \quad (2)$$

The saturation current I_0relation is presented as follows:

$$I_0 = I_{rs}\left(\frac{T}{Tr}\right)^3 \exp\left[\frac{qE}{ak}\left(\frac{1}{T_r} - \frac{1}{T}\right)\right] \quad (3)$$

The expression for the thermal voltage of the cell is given by:

$$V_{th} = \frac{KT}{q} \quad (4)$$

where: R_s and R_p is the series and the parallel resistance respectively.

K=1.3805e-23 j/k is the Boltzmann constant.

T_r=25°c is the reference temperature (standard conditions), T is the cell temperature.

q =1.6e-19 C is the charge of electrons.

E is the band gap energy depends on semiconductor material used in photovoltaic cells.

a =1.3 is the diode ideality factor.

The reverse saturation current equation is given by:

$$I_{rs} = \frac{I_{scr}}{\exp\left[\left(\frac{qV_{oc}}{N_s kaT}\right) - 1\right]} \quad (5)$$

The current passes in the resistance R_p is calculated as follows:

$$I_p = \frac{V_{pv} + R_s I_{pv}}{R_p} \quad (6)$$

Fromthe Eq. (1), we determine the current I_{pv} produced by PV cell:

$$I_{pv} = I_{ph} - I_d - I_p \quad (7)$$

By substitution Eq. (2) and Eq. (6) into Eq. (7), the resulting equation is:

$$I_{pv} = I_{ph} - I_0\left[\exp\left(\frac{V_{pv}+R_s I_{pv}}{V_{th}\,a}\right)-1\right]-\left(\frac{V_{pv}+R_s I_{pv}}{R_p}\right) \quad (8)$$

The photocurrent I_{ph} relation is expressed by:

$$I_{ph} = \left(I_{sc} + K_i\left(T - T_r\right)\right)\frac{G}{G_r} \quad (9)$$

I_{sc} is the short-circuit current, K_i is the temperature coefficient,G_r (W/m²) =1000 is the reference irradiation (standard conditions), and G (W/m²) is the irradiation in the cell surface.

3. BOOST CONVERTER MODEL

The boost converter is a necessary component for stepping up voltage and supplying a DC load. The following figure shows the structure of this converter.

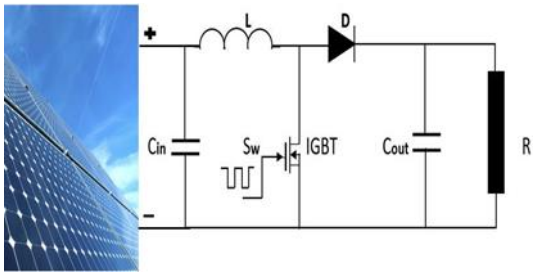

Fig. 2Circuit of the boost converter.

The mathematical model of the boost converter is presented below. There are two possible operating modes, depending on whether the IGBT is on or off.

- Switch ON: in this case, the IGBT switch is closed.

$$\begin{cases} \dfrac{dI_{pv}}{dt} = \dfrac{V_{pv}}{L} \\ \dfrac{dV_o}{dt} = -\dfrac{V_o}{C_{out}R} \end{cases} \quad (10)$$

- Switch OFF: in this case, the IGBT switch is open.

$$\begin{cases} \dfrac{dI_{pv}}{dt} = \dfrac{\left(V_{pv} - V_o\right)}{L} \\ \dfrac{dV_o}{dt} = \dfrac{I_{pv}}{C_{out}} - \dfrac{V_o}{C_{out}R} \end{cases} \quad (11)$$

Finally, the dynamic model of the boost converter is given as follows:

$$\begin{cases} \dfrac{dI_{pv}}{dt} = \dfrac{V_{pv}}{L} - \dfrac{V_o(1-U)}{L} \\ \dfrac{dV_o}{dt} = \dfrac{I_{pv}(1-U)}{C_{out}} - \dfrac{V_o}{C_{out}R} \end{cases} \quad (12)$$

Where V_{pv}, V_o are the PV voltage and output voltage respectively, and U is the duty cycle. The previous dynamic model can be used to calculate the boost converter parameters.

The duty cycle of the converter can be written as:

$$U = \frac{V_o - V_{pv}}{V_o} \text{ , with } U \in [0, 1] \quad (13)$$

The inductance is determined using the equationbelow:

$$L = \frac{U \times V_{pv}}{f_{sw} \times \Delta I_L} \quad (14)$$

The output capacitance is calculated as follows:

$$C_{out} = \frac{V_o \times U}{R \times f_{sw} \times \Delta V_o} \quad (15)$$

Where ΔI_L is the current ripples and ΔV_o is the voltage ripples.

4. THE MODIFIED SUPERTWISTING SLIDING MODE CONTROLLER DESIGN:

The super twisting sliding mode control is one of the robust techniques widely used for controlling systems. Its main advantage lies in its ability to overcome the chattering phenomenon that appears in traditional SMC and not need any data about the controlled system. In this study, a modified super twisting SMC (M-STSMC) is developed to further enhance the tracking of the maximum power point and reduce steady-state oscillations. The designed technique based on replacing the integral action with a fractional integrator.

The chosen sliding surface and the mathematical model of the strategy is presented below:

$$S = \left(\frac{I_{pv}}{V_{pv}} + \frac{dI_{pv}}{dV_{pv}}\right) \quad (16)$$

Therefore, to achieve the maximum power point, the surface must be forced to zero by the super twisting SMC. The control law contains two principal terms as follows:

$$U = U_{eq} + U_{STSMC} \quad (17)$$

The equivalent term is calculated using the following equation:

$$\dot{S} = \left[\frac{dS}{dX}\right]^T \dot{X} = 0 \quad (18)$$

$$\dot{X} = f(X) + g(X)U_{eq} \quad (19)$$

$$X = \begin{bmatrix} I_{pv} \\ V_o \end{bmatrix} f(X) = \begin{bmatrix} \dfrac{V_{pv} - V_o}{L} \\ \dfrac{I_{pv}}{C_{out}} - \dfrac{V_o}{C_{out}R} \end{bmatrix} g(X) = \begin{bmatrix} \dfrac{V_o}{L} \\ -\dfrac{I_{pv}}{C_{out}} \end{bmatrix} \quad (20)$$

So, the equivalent control (U_{eq}) equals:

$$U_{eq} = -\frac{\left[\frac{dS}{dX}\right]^T f(X)}{\left[\frac{dS}{dX}\right]^T g(X)} = \left(1 - \frac{V_{pv}}{V_o}\right) \quad (21)$$

The second term is given in equation (22), [13]:

$$U_{STSMC} = -\lambda |S|^{\rho} sign(S) - W \int sign(S) \quad (22)$$

The sufficient conditions to ensure the finite convergence time are:

$$\begin{cases} W > \frac{\Phi}{\Gamma_m} \\ \lambda^2 \geq \frac{4\Phi}{\Gamma^2_m} \frac{\Gamma_M (w + \Phi)}{\Gamma_m (w + \Phi)} \\ 0 < \rho < 0.5 \end{cases} \quad (23)$$

Where Γ_M , Γ_m , Φ are a positive constants and W , λ ,γ, ρ are the control gains. Therefore, the control equation becomes:

$$U = \left(1 - \frac{V_{pv}}{V_o}\right) - \lambda |S|^{\rho} sign(S) - W \frac{1}{S^{\gamma}} sign(S) \quad (24)$$

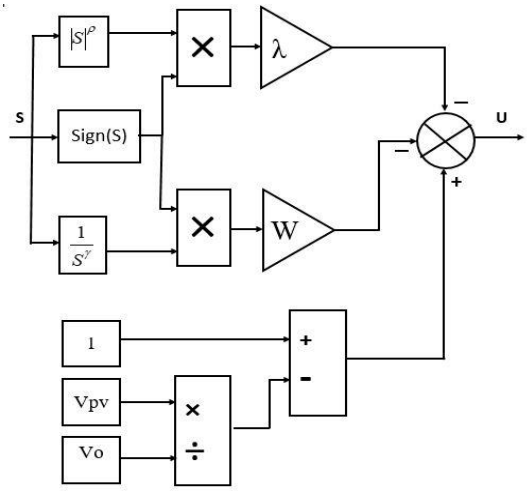

Fig. 3 Scheme of the M-STSMC.

5. DISCUSSION AND RESULTS:

In this study, a modified STSMC is developed to achieve the maximum power point in photovoltaic system under different levels of irradiation. The strategy is designed also to optimize the performance of the conventional STSMC, enhance its efficiency, and minimize the chattering phenomenon occurred and effect about the power quality. The simulation is implemented in MATLAB/SIMULINK, and the results are presented as a comparison between the classical STSMC and the modified STSMC proposed in this study.

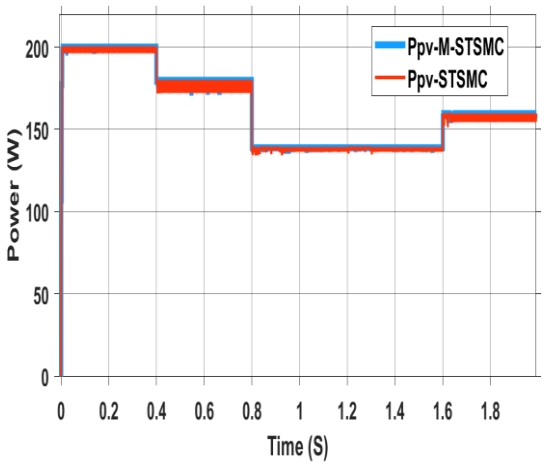

Fig. 4 Power of PV panel.

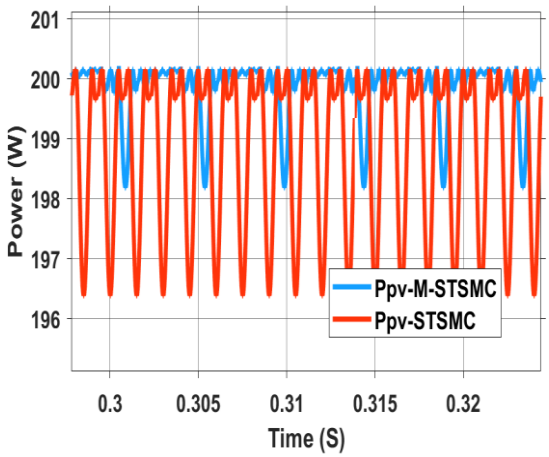

Fig. 5 Zoom of the PV power.

Fig. 4 and Fig. 5 show the power generated by the photovoltaic panel using the two techniques. The results demonstrate the superiority of the M-STSMC compared to the standard STSMC, as it achieves the MPP with fewer oscillations under different levels of irradiation.

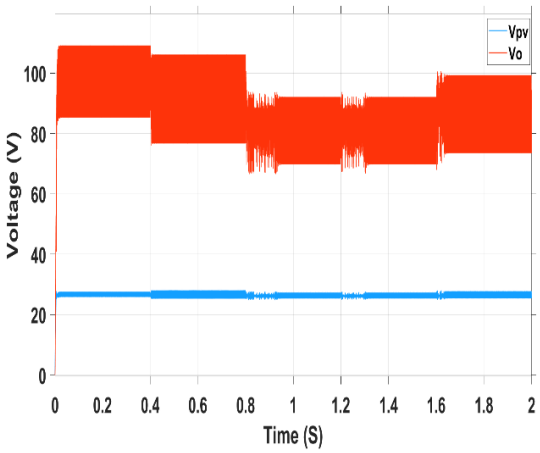

Fig. 6 the PV and output voltage (STSMC).

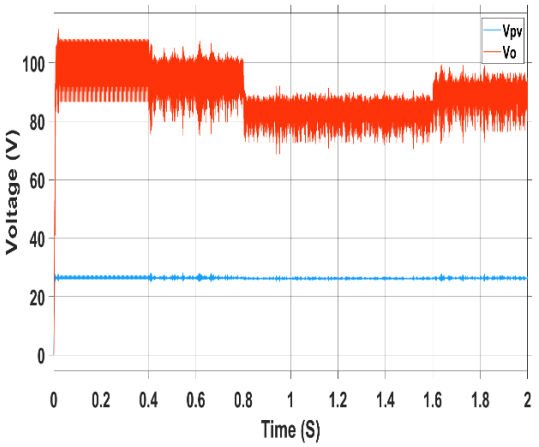

Fig. 7 the PV and output voltage (M-STSMC).

From Fig. 6, Fig. 7, Fig. 8, and Fig. 9, we can see the improvement in voltage and current results using the M-STSMC. The steady state oscillations are reduced compared to the STSMC method, so to get a required power quality to supply the charge efficiently.

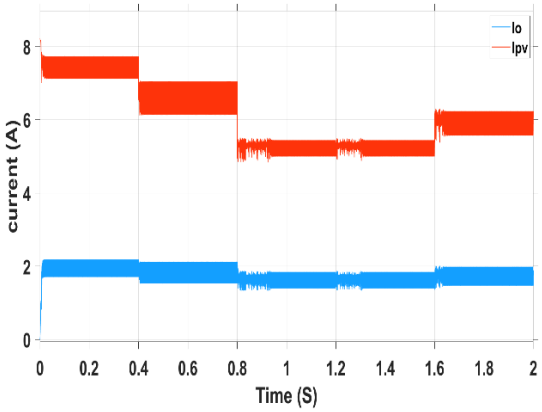

Fig. 8 the PV and output current (STSMC).

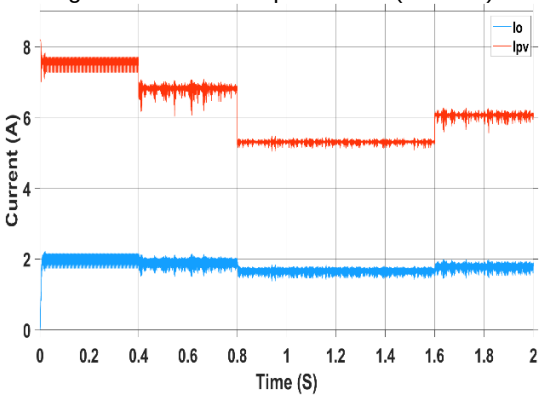

Fig. 9the PV and output current (M-STSMC).

1. CONCLUSION:

In order to track the maximum power point in PV systems and enhance their efficiency and performance, many nonlinear control methods have been developed and proposed. In this paper, a modified STSMC is designed to improve the conventional STSMC and obtains maximum power, while reducing the chattering phenomenon. The obtained results show an improvement in the performances under variations of irradiance by dint of the mediation of a fractional integrator in the traditional STSMC, which increases its flexibility.

References

[1] D. Maradin, “Advantages and disadvantages of renewable energy sources utilization,” International Journal of Energy Economics and Policy, 2021.

[2] F. Chien, H. W. Kamran, G. Albashar, and W. Iqbal, “Dynamic planning, conversion, and management strategy of different renewable energy sources: a sustainable solution for severe energy crises in emerging economies,” International Journal of Hydrogen Energy, vol. 46, no. 11, pp. 7745–7758, 2021.

[3] Erdiwansyah, Mahidin, H. Husin, Nasaruddin, M. Zaki, and Muhibbuddin, “A critical review of the integration of renewable energy sources with various technologies,” Protection and control of modern power systems, vol. 6, pp. 1–18, 2021.

[4] R. A. Badwawi, M. Abusara, and T. Mallick, “A review of hybrid solar PV and wind energy system,” Smart Science, vol. 3, no. 3, pp. 127–138, 2015.

[5] A. Ba, C. O. Ehssein, M. E. M. O. M. Mahmoud, O. Hamdoun, and A. Elhassen, “Comparative study of different DC/DC power converter for optimal PV system using MPPT (P&O) method,” Applied Solar Energy, vol. 54, pp. 235–245, 2018

[6] E. Kabalci, “Maximum power point tracking (MPPT) algorithms for photovoltaic systems,” Energy Harvesting and Energy Efficiency: Technology, Methods, and Applications, pp. 205–234, 2017.

[7] A. Ibnelouad, A. El Kari, H. Ayad, and M. Mjahed, “Comparison of fuzzy and neural networks controller for MPPT of photovoltaic modules,” in Innovations in Smart Cities and Applications: Proceedings of the 2nd Mediterranean Symposium on Smart City Applications 2, Springer, 2018, pp. 515–527.

[8] E. Kandemir, S. Borekci, N.S. Centi, 2018. Comparative analysis of reduced-rule compressed fuzzy logic control and incremental conductance MPPT methods. Journal of Electronic Materials 47, 4463–4474.

[9] Z. Erdem, “An advanced particle swarm optimization algorithm for MPPTs in PV systems,” Acta Physica Polonica A, vol. 132, no. 3, pp. 1134–1139, 2017.

[10] N. Priyadarshi, V. K. Ramachandaramurthy, S. Padmanaban, and F. Azam, “An ant colony optimized MPPT with single Cuk converter for standalone hybrid PV-wind power generation for residential applications and changing operating conditions,” 2018.

[11] Y. M. Alsmadi et al., “Sliding mode control of photovoltaic based power generation systems for microgrid applications,” International

Journal of Control, vol. 94, no. 6, pp. 1704–1715, 2021.

[12] Y. Chaibi, M. Salhi, and A. El-Jouni, “Sliding mode controllers for standalone PV systems: Modeling and approach of control,” International Journal of Photoenergy, vol. 2019, 2019.

[13] D. Xu, G. Wang, W. Yan, and X. Yan, “A novel adaptive command-filtered backstepping sliding mode control for PV grid-connected system with energy storage,” Solar Energy, vol. 178, pp. 222–230, 2019.

[14] R. Khan, L. Khan, S. Ullah, I. Sami, and J.-S. Ro, “Backstepping based super-twisting sliding mode MPPT control with differential flatness oriented observer design for photovoltaic system,” Electronics, vol. 9, no. 9, p. 1543, 2020.

[15] K. Zeb et al., “Design of super twisting sliding mode controller for a three-phase grid-connected photovoltaic system under normal and abnormal conditions,” Energies, vol. 13, no. 15, p. 3773, 2020.

[16] Z. B. H. Salah et al., “A New Efficient Cuckoo Search MPPT Algorithm Based on a Super-Twisting Sliding Mode Controller for Partially Shaded Standalone Photovoltaic System,” Sustainability, vol. 15, no. 12, p. 9753, 2023.

[17] A. Kchaou, A. Naamane, Y. Koubaa, and N. M’sirdi, “Second order sliding mode-based MPPT control for photovoltaic applications,” Solar Energy, vol. 155, pp. 758–769, 2017.

[18] S. Ahmed, H. M. Muhammad Adil, I. Ahmad, M. K. Azeem, Z. e Huma, and S. Abbas Khan, “Supertwisting sliding mode algorithm based nonlinear MPPT control for a solar PV system with artificial neural networks based reference generation,” Energies, vol. 13, no. 14, p. 3695, 2020.

[19] M. Gursoy, G. Zhuo, A. G. Lozowski, and X. Wang, “Photovoltaic energy conversion systems with sliding mode control,” Energies, vol. 14, no. 19, p. 6071, 2021.

[20] Z. Alam, Q. Khan, L. Khan, S. Ullah, S. A. M. Kirmani, and F. R. Albogamy, “Certainty-Equivalence-Based Sensorless Robust Sliding Mode Control for Maximum Power Extraction of an Uncertain Photovoltaic System. Energies 2022, 1, 1.

[21] H. Gasmi, S. Mendaci, S. Laifa, W. Kantas, and H. Benbouhenni, “Fractional-order proportional-integral super twisting sliding mode controller for wind energy conversion system equipped with doubly fed induction generator,” J. Power Electron., vol. 22, no. 8, pp. 1357–1373, Aug. 2022, doi: 10.1007/s43236-022-00430-0.

[22] K. Walid, M. Sofiane, H. Benbouhenni, G. Hamza, and T. Es-saadi, “Application of third-order sliding mode controller to improve the maximum power point for the photovoltaic system,” Energy Reports, vol. 9, pp. 5372–5383, 2023, Accessed: Jan. 08, 2024.